REVISIONS

REV.	DESCRIPTION	BY	CHKD	APRVD	DATE
F	PER ECO C47369	GF	BBB	BBB	4.8.09
G	PER ECO C47402	RB	BBB	BBB	3.3.10
H	PER ECO C47509	RM	BBB	BBB	4.3.12

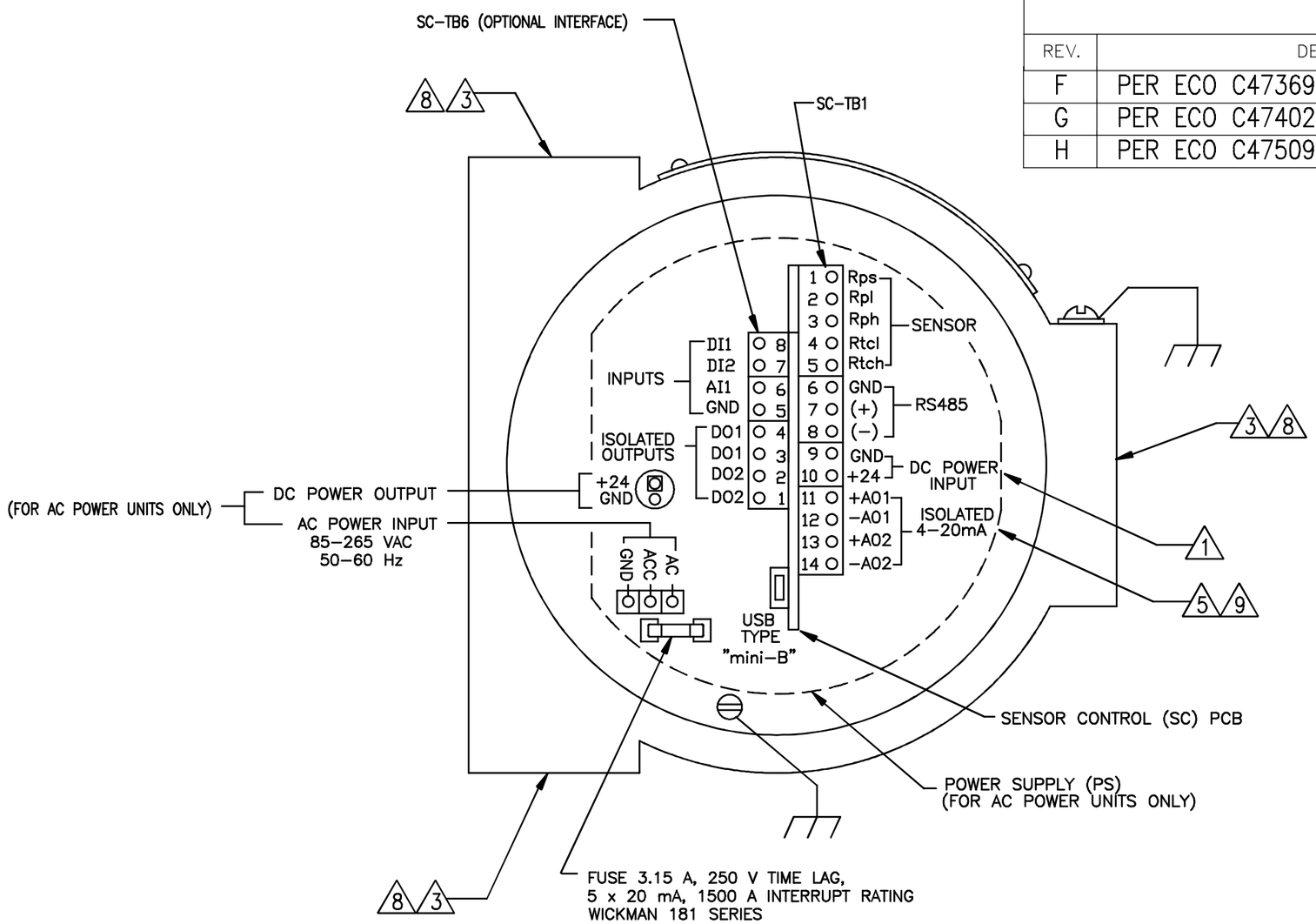

COMPONENT DIAGRAM

FOR NOTES SEE SHEETS 5 & 6

NEXT ASSEMBLY

UNLESS OTHERWISE SPECIFIED DIMENSIONS ARE IN INCHES

TOLERANCES ARE

FRACTIONS ± 1/16

ANGLES ± 1°–0'

DECIMALS

.X ± 0.1
.XX ± 0.03
.XXX ± 0.003

ORIG. RELEASE DATE

APPROVALS	
DRAWN BY R. MARTINEZ	DATE 4/2/12
CHECKED BY B. BURTON	DATE 4/3/12
APPROVED B. BURTON	DATE 4/3/12

KURZ INSTRUMENTS, INC.

FIELD WIRING DIAGRAM
MFT–B SERIES (ATEX)

DWG. SIZE	DWG. NO.	REV.
B	342038	H
	SCALE 1" = 1"	SHEET 1 OF 6

EXAMPLE INSTRUMENT POWERED 4–20 mA CONNECTIONS

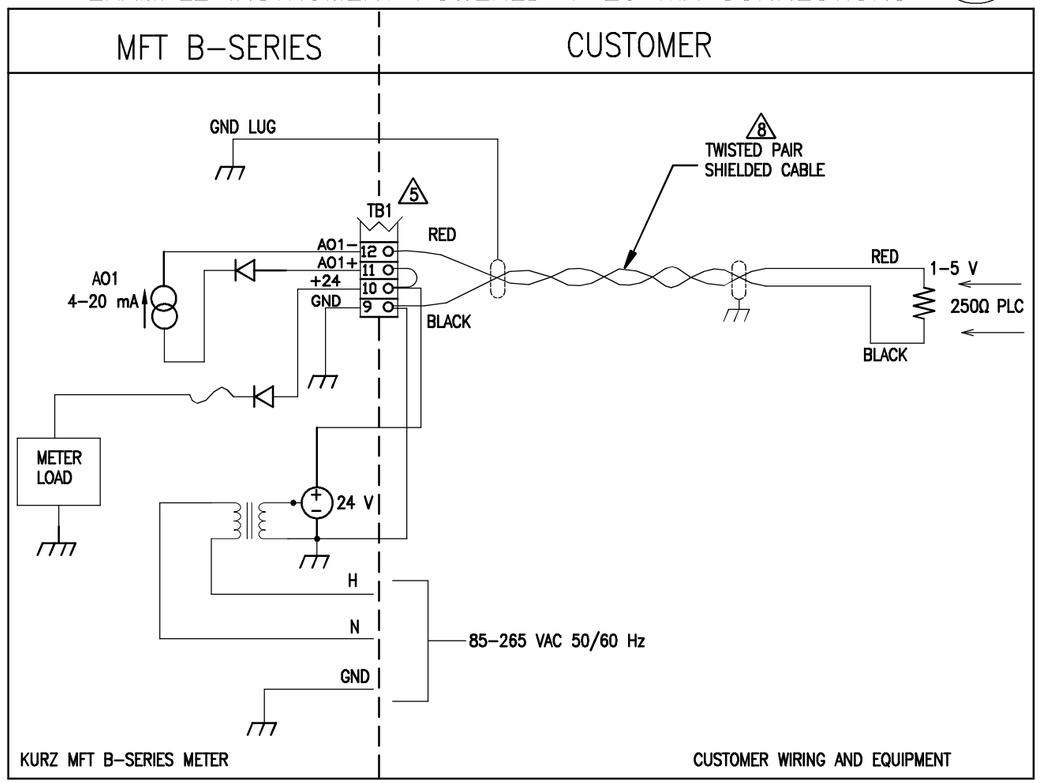

EXAMPLE LOOP POWERED 4–20 mA CONNECTIONS

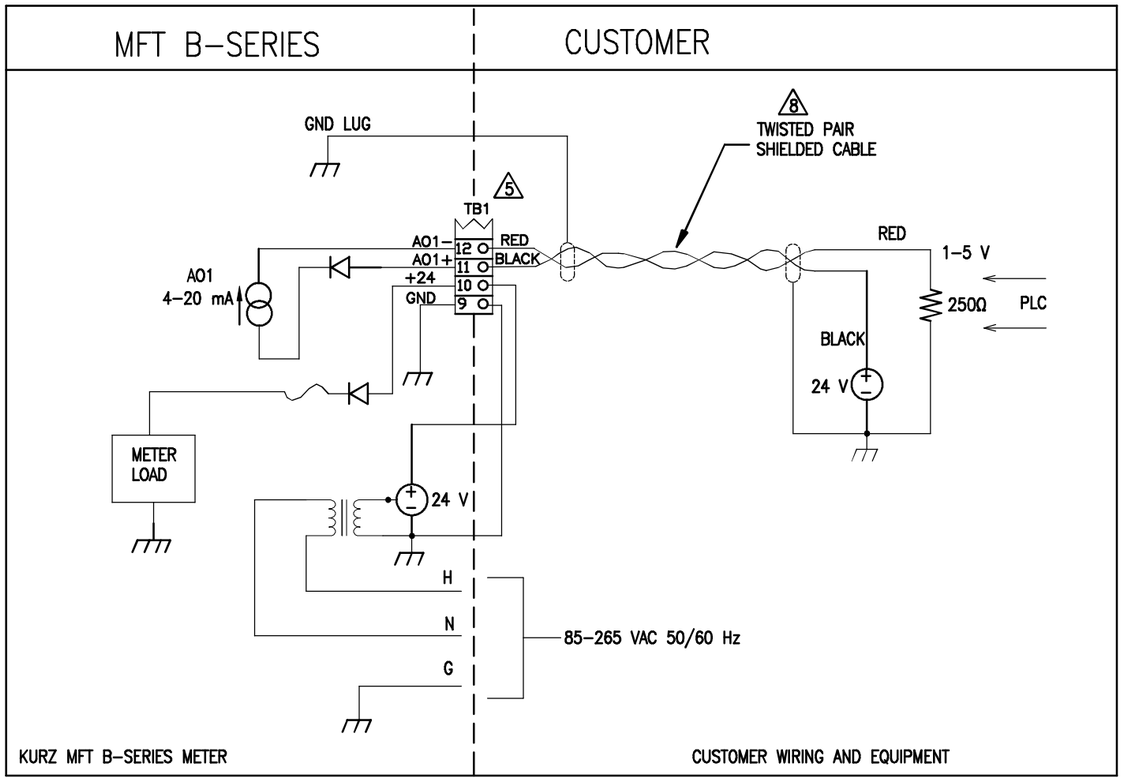

KURZ INSTRUMENTS, INC.

FIELD WIRING DIAGRAM
MFT B–SERIES (ATEX)

DWG. SIZE	DWG. NO.	REV.
B	342038	H
	SCALE NONE	SHEET 2 OF 6

EXAMPLE PURGE VALVE CONNECTIONS

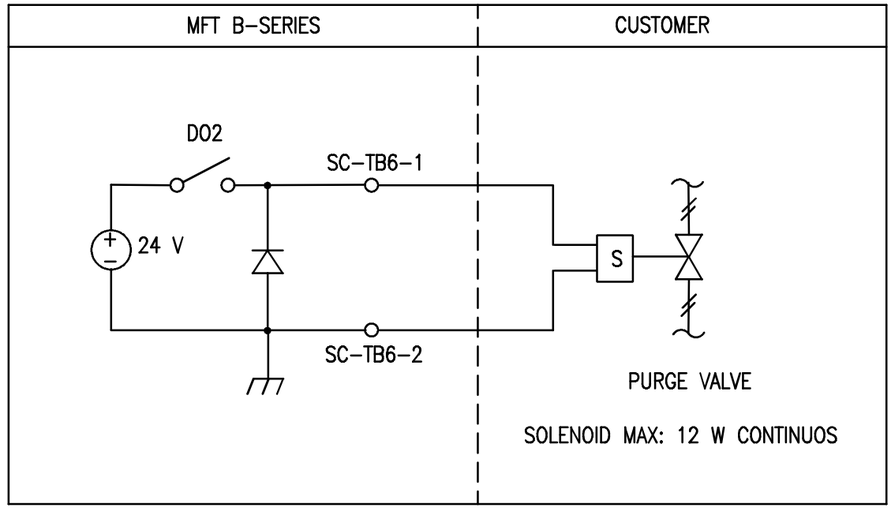

EXAMPLE EXTERNAL 4-20 mA INPUT

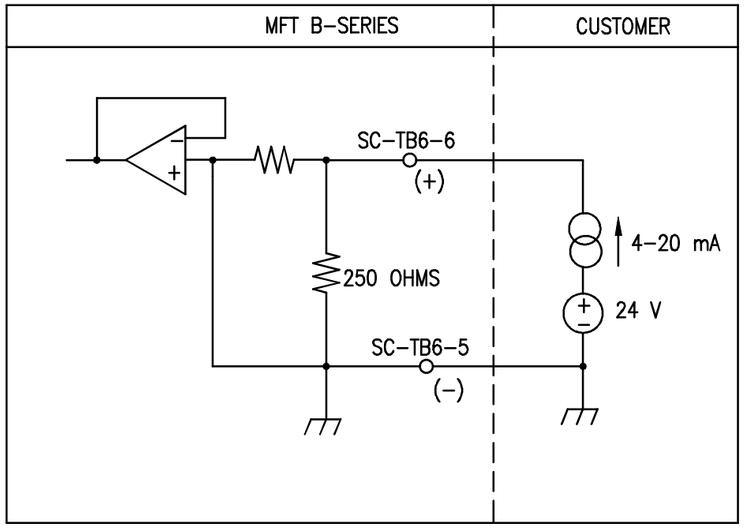

EXAMPLE DIGITAL OUTPUT OR ALARM CONNECTIONS

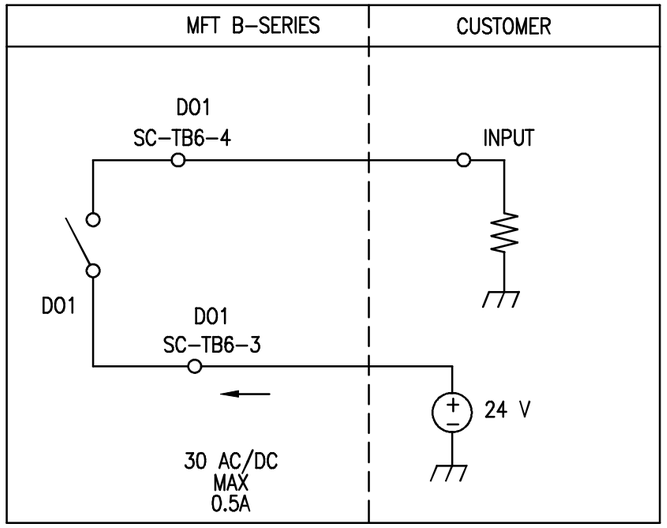

KURZ INSTRUMENTS, INC.

FIELD WIRING DIAGRAM
MFT B-SERIES (ATEX)

DWG. SIZE	DWG. NO.	REV.
B	342038	H
	SCALE NONE	SHEET 3 OF 6

MODBUS MULTIPOINT SERIAL CONNECTIONS

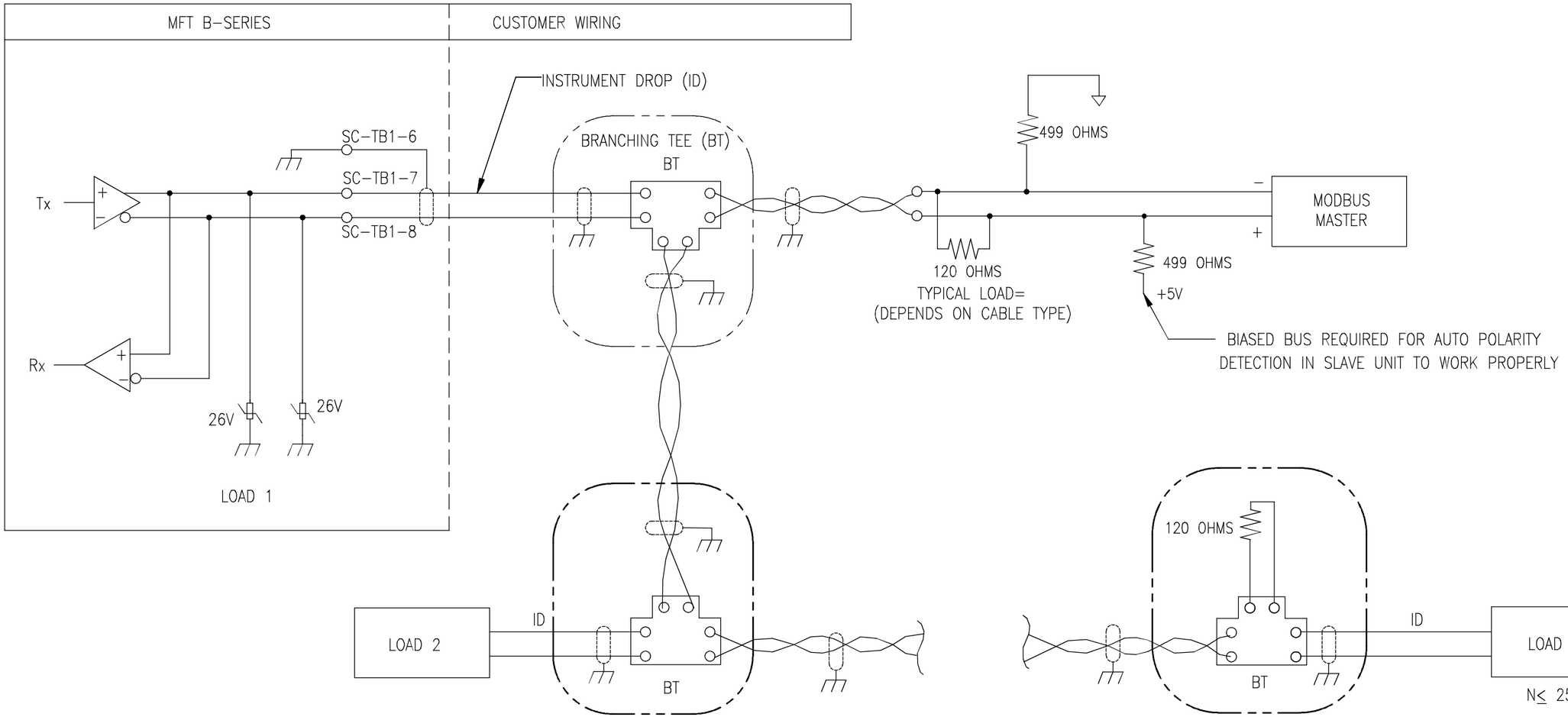

TYPICAL LONG DISTANCE HALF DUPLEX CONNECTION RS-485
MULTI DROP OR MULTIPOINT SERIAL CONNECTIONS

KURZ INSTRUMENTS, INC.		
FIELD WIRING DIAGRAM MFT B-SERIES (ATEX)		
DWG. SIZE B	DWG. NO. 342038	REV. H
	SCALE NONE	SHEET 4 OF 5

NOTES: UNLESS OTHERWISE SPECIFIED, (NOTES CON'T. ON SHEET 5)

1. 24 VDC, 21 W (MINIMUM 18 V)
   24 VDC POWER WIRING
   6 OHMS MAXIMUM PER WIRE, ~3 V DROP

AWG	MAX. LENGTH (FT)
18	942
16	1494
14	2376
12	3780

2. SEE USERS MANUAL 360209 FOR ADDITIONAL INFO.

3. 3/4" CONDUIT GLAND OR POTTING Y MUST BE DIRECTLY ATTACHED TO THE ENCLOSURE TO MAINTAIN Ex d RATING.

4. TO ENSURE SAFETY FROM ELECTRIC SHOCK AND MINIMIZE THE CHANCE OF AN ELECTRIC SPARK CAUSING IGNITION, THE UNIT MUST HAVE A GROUND WIRE CONNECTED TO EARTH "THE INSIDE GROUND STUD AND/OR OUTSIDE GROUND STUD".

5. COMPLIANCE, 11 VOLT TO 40 VOLT FOR AO CIRCUIT, 48V PEAK ISOLATION FROM INSTRUMENT GROUND.

6. FOR TRANSMITTER SEPARATE SEE DWG. #342039

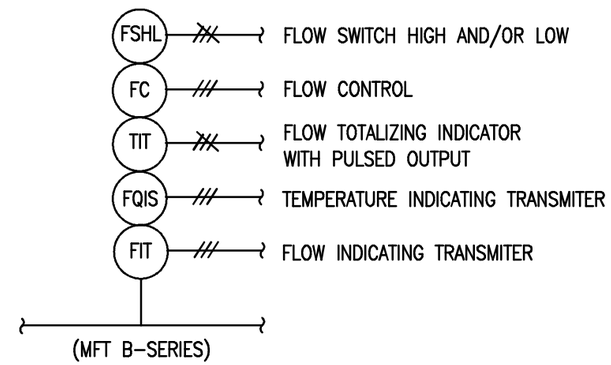

PI&D SYMBOLS

KURZ INSTRUMENTS, INC.		
FIELD WIRING DIAGRAM MFT B-SERIES (ATEX)		
DWG. SIZE B	DWG. NO. 342038	REV. H
	SCALE NONE	SHEET 5 OF 6

7. SC BOARD I/O TERMINAL DESCRIPTION (SEE BELOW):

SC BOARD TB1 9.

TERMINAL #	NAME	DESCRIPTION
TB1-1	Rps	VELOCITY SENSOR LEAD WIRE SENSE VOLTAGE
TB1-2	Rpl	VELOCITY SENSOR CURRENT RETURN LEAD
TB1-3	Rph	VELOCITY SENSOR HIGH SIDE DRIVE OUTPUT
TB1-4	Rtcl	REFERENCE TEMPERATURE SENSOR LOW SIDE RETURN
TB1-5	Rtch	REFERENCE TEMPERATURE SENSOR LOW SIDE DRIVE
TB1-6	GND	CHASSIS GROUND. USE FOR RS-485 SHIELD
TB1-7	RS485+	RS-485 + LEAD
TB1-8	RS485-	RS-485 - LEAD
TB1-9	GND	CHASSIS GROUND, USED FOR 24V POWER GROUND
TB1-10	+24 VDC	+24 V POWER INPUT (18 TO 30 VDC, 21W)
TB1-11	AO1+	ANALOG OUTPUT 1 + INPUT POWER CONNECTION. USUALLY 24VDC FROM THE CUSTOMER. ISOLATED OUTPUT, PRESENT ON HART OPTION
TB1-12	AO1-	ANALOG OUTPUT 1 - 4-20mA CURRENT NE43 COMPLAINT ISOLATED OUTPUT, PRESENT ON HART OPTION
TB1-13	AO2+	ANALOG OUTPUT 2 + INPUT POWER CONNECTION. USUALLY 24VDC FROM THE CUSTOMER. ISOLATED OUTPUT, NOT PRESENT ON HART OPTION
TB1-14	AO2-	ANALOG OUTPUT 2 - 4-20mA CURRENT NE43 COMPLAINT ISOLATED OUTPUT, NOT PRESENT ON HART OPTION

SC BOARD TB6 (OPTIONAL INTERFACE)

TB6-1	DO2	DIGITAL OUTPUT 2, SSR TERMINAL A. ISOLATED SSR. ALSO USED AS A SWITCHED +24VDC OUT FOR A SOLENOID DRIVE IN THE PURGE OPTION
TB6-2	DO2	DIGITAL OUTPUT 2, SSR TERMINAL B. ISOLATED SSR. ALSO USED AT A CHASSIS GROUND FOR A SOLENOID DRIVE IN THE PURGE OPTION
TB6-3	DO1	DIGITAL OUTPUT 1, SSR TERMINAL A. ISOLATED SSR
TB6-4	DO1	DIGITAL OUTPUT 1, SSR TERMINAL B. ISOLATED SSR
TB6-5	GND	CHASSIS GND. COMMON CONNECTION FOR AI1, DI1 OR DI2
TB6-6	AI1	ANALOG INPUT 1. 0 TO 20 mA INPUT, NON-ISOLATED
TB6-7	DI2	DIGITAL INPUT 2, SHORT TO GND TO ACTIVATE THE ZERO/SPAN CALIBRATION SEQUENCE
TB6-8	DI1	DIGITAL INPUT 1, SHORT TO GND TO ACTIVATE THE PURGE TIMER SEQUENCE

SC BOARD USB

USB	TYPE B	USB 1.0 HID TYPE INTERFACE TO A COM EMULATION DRIVER USED IN WINDOWS "PC KURZ USB DRIVER" # 451035

SC BOARD J4

J4	LCD	INTERFACE FOR KURZ LCD/KEYBOARD, FIRMWARE 4.1 OR HIGHER

8. SHIELDED CABLE OR CONDUIT SYSTEMS ON ALL WIRES.

EXAMPLES:

BRAIDED CABLE WITH MULTI-CONDUCTORS
RIGID CONDUIT (PIPE) WITH WIRES PULLED INSIDE
EMT WITH COMPRESSION END TERMINATIONS WITH WIRES PULLED INSIDE
CORRUGATED SOLID FLEX LIKE USED ON GAS APPLIANCES CONNECTIONS WITH WIRES PULLED INSIDE

SPECIAL REQUIREMENTS: NONE

UNSHIELDED CABLE OR CONDUIT SYSTEMS ON ALL WIRES.

EXAMPLES:

MULTI-CONDUCTOR CABLE(S) OR DISCREET WIRES
FLEX CONDUIT WITH SPIRAL WRAPPED METAL
CABLE WITH SPIRAL WRAPPED METAL
CABLE WITH SPIRAL WRAPPED WIRES OR ARMOR

SPECIAL REQUIREMENTS: (SEE BELOW)

A. 4-20mA OUTPUTS REQUIRE A SHIELDED CABLE TERMINATED AT THE SC BOARD AND AND CUSTOMER END. PIG-TAIL SHIELD CONNECTION OK.
B. SENSOR CABLE REQUIRES A SHIELDED CABLE TERMINATED TO CHASSIS AT THE SENSOR AND ELECTRONICS ENCLOSURES. PIG-TAIL SHIELD CONNECTION OK.
C. RS-485 REQUIRES A SHIELDED CABLE TERMINATED AT THE SC BOARD AND THE CUSTOMER END TO THE CHASSIS OR A GROUND TERMINAL. PIG-TAIL SHIELD CONNECTION OK.
D. FERRITE ON ALL I/O CLABES LEAVING THE SC ENCLOSURE LOCATED WITH IN THE ENCLOSURE NEAR THE TERMINAL BLOCKS. THIS DOES NOT INCLUDE THE SENSOR NOR AC POWER CABLE. PART NUMBER IS STEWARD 28A2024.0A2 AVAILABLE FROM DIGIKEY OR FAIR-RITE 0443164151. KURZ PART # 600029-

9. ON STANDARD SENSOR CONTROL PCB SC-TB1 HAS 14 TERMINALS, WITH TWO ANALOG OUTPUTS.

ON SENSOR CONTROL PCB WITH HART OPTION SC-TB1 HAS ONLY 12 TERMINALS, WITH ONE ANALOG OUTPUT.

KURZ INSTRUMENTS, INC.

FIELD WIRING DIAGRAM
MFT B-SERIES (ATEX)

DWG. SIZE	DWG. NO.	REV.
B	342038	H
	SCALE NONE	SHEET 6 OF 6